SF-25 & SF-10

Owner's Manual





THE SAN FRANCISCAN ROASTER CO.

+1 (775) 996-2280 (Int'l)
866-957-9233 (Toll-free US/CAN)

4048 Technology Way, Ste. F
Carson City, NV 89706

www.sanfranroaster.com
support@sanfranroaster.com

This page is intentionally left blank.

Table of Contents

2 **Directory**
3 **SFR Warranty**
4 **Suggested Cleaning Supplies**
4 **Recommended Tools**

5 **Section 1: General Warnings & Disclaimer**
6 *Safety & Warnings*

7 **Section 2: Receiving Instructions**
7 *Receiving the Shipment*
7 *Bill of Lading & Crate Inspection*
8 *Uncrating Instructions*
8 *Transferring Roaster from Pallet*

9 **Section 3: Installation Instructions**
9 *Installation Area*
9 *Foundation*
10 *Specifications*
11 *SF-25 Specs with Afterburner*
12 *SF-25 Specs without Afterburner*
13 *SF-10 Specs*

14 **Section 4: Roaster Operations**
14 *Pre-Operations Checklist*
15-16 *Warming Up the Roaster*
17 *Roasting*
18 *Afterburner*
19 *Post Roast*
20 *Shut Down*

21 **Section 5: Maintenance**
22 ***Roaster***
23-24 *Roaster Diagrams*
25 *Cleaning the Sightglass*
25 *Cleaning the Drum Hub*
26 *Adjusting the Drum Spacing*
27 *Cleaning the Discharge Door*
28 *Cleaning the Chip Tray & Burners*
29 *Cleaning the Chain Drive*
30 *Roaster Disassembly*
30 *Cleaning the Green Bean Hopper*
31 *Cleaning the Crossover Pipe*
32 ***Cyclone and Afterburner***
33-34 *Cleaning the Cyclone*
35 *Cleaning the Afterburner*
36 ***Cooling Tray***
37 *Cleaning the Cooling Tray*
38 *Cleaning the Cooling Blower and L-Pipe*
39 *Reassembly*

40 **Appendix**
40-43 *SF-25 Schematics*
44-46 *SF-10 Schematics*

Directory

—EMAIL US—

Support, Technical Assistance, and Parts
support@sanfranroaster.com

Consulting/General Information
info@sanfranroaster.com

Delivery Updates
progress@sanfranroaster.com

—CALL US—

US & Canada
Toll-free
(866) 957-9233

International
+1 (775) 996-2280

SFR Warranty

The San Franciscan Roaster Co. offers a 12-month limited warranty from the time of delivery on all electrical and mechanical parts. Defects in workmanship and fabrication are covered for the life of the roaster. Labor and shipping charges are not covered under the warranty.

The San Franciscan Roaster Company is not liable for any damage to roasting equipment caused by improper installment, usage, or manipulation to the product. Please read and follow all Receiving, Installation, Operation, and Maintenance Instructions properly to avoid issues related to user performance. Additionally, failure to adhere to municipal codes and permitting is not covered under this warranty. Please ensure you are following all local laws and regulations prior to roaster installation.

Due to the innate characteristics of wood, The San Franciscan Roaster Co. does not cover any warping, cracking, or other damages to wooden features used on roasting machines.

Under this warranty, customers must contact The San Franciscan Roaster Company via email or phone about any defects prior to the warranty expiration date. A support technician will assist you and decide under his/her sole discretion if the product contains a defect. The San Franciscan Roaster Company will pay for replacement parts and shipping of any product under warranty. Customers are responsible for repairs and installation.

If any parts are purchased from any other distributor other than The San Franciscan Roaster Company, that part is not covered by warrenty.

For additional questions related to The San Franciscan Roaster Company's warranty, please contact your equipment representative.

Suggested Cleaning Supplies

- Coffee/espresso machine cleaner
- Hand held scraper and chiminy cleaner
- Flat razor
- Mobil FM222 food grade grease for front and rear bearings
- Loctite RTV 598 black hi-performance silicone for high-temperature seals
- Urinex Roaster Soakz for coffee oils and residue
- Chain lube



Recommended Tools

- Pallet jack (for Receiving & Installation)
- Hand wrenches and sockets, Allen wrenches, screwdrivers
- Grease gun
- Hand-held brass wire brushes/scrub brush/toothbrush
- Powered brass wire brush set and extension(s)
- Soft cloths
- Compressed air source
- ShopVac
- Soft brush
- Gloves, safety goggles, dust mask









Section 1: *General Warnings & Disclaimer*



The San Franciscan Model SF-25 & SF-10 are industrial machines of considerable complexity. The energy levels involved in their operations are high and must be treated with respect. Additionally, the machines incorporate a number of safety interlocks, lockouts, and process recovery capabilities. The Operator must understand the roasters and their systems for safe operation.

CAUTIONS: Post in a prominent location the instructions to be followed if user smells gas. Obtain information from local gas supplier.

—FOR YOUR SAFETY—
DO NOT STORE OR USE GASOLINE OR OTHER FLAMMABLE VAPORS OR LIQUIDS IN THE VICINITY OF THIS OR ANY OTHER APPLIANCE.

"Intended for other than household use."
«"Destinado a usos distintos al doméstico".»

WARNING: Improper installation, adjustment, alteration, service or maintenance can cause property damage, injury or death. Read the installation, operating and maintenance instructions thoroughly before installing or servicing this equipment.

***ADVERTENCIA:** La instalación, ajuste, alteración, servicio o mantenimiento inadecuados pueden causar daños a la propiedad, lesiones o la muerte. Lea detenidamente las instrucciones de instalación, funcionamiento y mantenimiento antes de instalar o reparar este equipo.

WARNING: Electrical Grounding Instructions - This appliance is equipped with a three-prong (grounding) plug for your protection against shock hazard and should be plugged directly into a properly grounded three-prong receptacle. Do not cut or remove the grounding prong from this plug.

***ADVERTENCIA:** Instrucciones de conexión a tierra eléctrica: este electrodoméstico está equipado con un enchufe de tres clavijas (conexión a tierra) para su protección contra riesgos de descargas eléctricas y debe enchufarse directamente a un receptáculo de tres clavijas con conexión a tierra adecuada. No corte ni retire la clavija de conexión a tierra de este enchufe.

FOR 220 Volt Single Phase 60 HZ

**Tenga en cuenta: la traducción se ha realizado con Google Translate.*



Safety & Warnings

Only individuals trained on this equipment or licensed contractors should service or operate this equipment. Before servicing, be sure your roaster is cool, the main gas control valve is in the "OFF" position. Turn "OFF" the Natural Gas or Propane Gas supply at the source. Unplug or disconnect your equipment from the electrical source. Follow proper lockout/tagout practices and procedures set forth by OSHA. Failure to follow these simple steps can result in property damage, personal injury, and even death.

The San Franciscan Roaster was designed to allow precise control of temperature and air-flow. These controls provide craftsmen the ability to develop their own style and approach to roasting. **Anomalies related to roaster performance can usually be traced back to cleaning issues. At start-up the roaster goes through an automatic system test for "proof of air" and "proof of flame", so a dirty roaster may not even ignite. Ultimately, consistency in your cleaning schedule will translate to consistency in the cup.**

Section 2: *Receiving Instructions*

Receiving the Shipment

In most circumstances, roasters will arrive on a freight delivery truck. Usually the truck will have a lift gate that will allow the crated roasters to me moved with a pallet jack. The SF-25 crate will not weigh more than 1,500 lbs (680.4 kg). The SF-10 crate will not weigh more than 950 lbs (431 kg).

Move the pallet into the uncrating location. Ensure that there is adequate space on all side of the roaster so that the sides of the crate can be accessed easily.

Note: The roaster is top heavy; keep pallet on level ground at all times.

Bill of Lading & Crate Inspection

Before signing the Bill of Lading please follow the instructions; do not sign the Bill of Lading until you have fully inspected the crates for any visible loss or damage.

1. Do not refuse shipment.
2. Inspect the crate for damage and make notation on delivery receipt of any Visible Loss or Damage.
3. If crate damage is discovered, leave the item in original container and packaging, and request immediate inspection from carrier.
4. If the tilt or shock indicators have been tripped, leave the item in original container and packaging, note damage on the Bill of Lading (take photos).
5. Contact The San Franciscan Roaster Co. if damage has occurred.

AT THE TIME OF DELIVERY, PLEASE MAKE NOTATIONS OF ANY DAMAGE ON THE BILL OF LADING AS FOLLOWS:

· Observable damage to the crate,
· If the tilt indicator was tripped, or
· If the shock indicator was tripped

Uncrating Instructions

1. Remove screws from the top of the crate first. This will require a ladder.
2. Next, remove the screws on the long side of the roaster.
3. Proceed by removing the remaining three walls on the front and sides of the roaster.
4. Unbolt the roaster feet from the pallet using a wrench or socket attachment.
5. Carefully remove the plastic shrink wrap from the roaster.
6. Remove the cooling tray and its contents to make it easier to remove the roaster from the pallet.

Transferring Roaster from Pallet

**Please note: This process will require four 2x4 wood blocks and four to five people. (Do not apply pressure to the drum cover, motors, control panel, wiring components, gas lines or other fragile components.)*

1. Slide the roaster to the edge of the pallet. Place the 2x4 wood blocks parallel to the pallet. If necessary, stack 2x4 wood blocks on top of each other for additional height.
2. Slide one half of the roaster onto the 2x4 wood blocks.
3. While tilting the roaster on the 2x4 blocks, slide the pallet from beneath the roaster.
4. Tip the other side of the roaster onto the ground, and remove the 2x4 wood blocks. Once the roaster is firmly on the ground, scoot it to the permanent location.

Once the roaster is in place, call your local HVAC and boiler technician. All installation must be completed by a certified professional.

Image 2.1



Section 3: *Installation Instructions*



Please Note: Installation should only be performed by qualified service personnel and must comply with all local regulations and requirements. All federal, state, and local codes take precedence over any suggested installation requirements. Incorrect installation may result in injury and/or damage to the roaster. The San Franciscan Roaster Company is not responsible for any liabilities as a result of improper installation.

Installation Area

• If the roasting area will be part of a retail establishment, a barrier between the roasting area and retail traffic is recommended.
• The area must be clear of flammable materials such as gasoline, paper, empty coffee sacks, paint, etc.
• Refer to the specifications to ensure that there is adequate clearance around the roaster.

Foundation

• Structure should be able to support the roaster. Refer to spec sheet for roaster weight.
• The roaster, afterburner, and/or cyclone may be bolted to the floor with anchor bolts.

SF-25 Specifications

WEIGHT	1350 LBS / 613.65 KG
DIMENSIONS	92" X 38" X 80" / 233.7 cm X 96.5 cm X 203.2 cm
HOT AIR EXHAUST	8" / 203.2 cm UL103 HT POSITIVE PRESSURE VENT PIPE (850 CFM)
VOLTAGE	208-230V 60Hz
AMPERAGE	30A RECOMMENDED SERVICE
GAS LINE REQ.	3/4" NPT
BTU	100,000 ROASTER / 250,000 AFTERBURNER (7" WC NATURAL GAS / 11" WC PROPANE)
APPROX. HOURLY CAPACITY	100 LBS / 45.5 KG GREEN , 85 LBS / 38.6 KG ROASTED
CERTIFICATION	ETL LISTED USA AND CANADA

SF-10 Specifications

WEIGHT	800 LBS / 363 KG
DIMENSIONS	83" X 55" X 85" / 211 cm X 140 cm X 216 cm
HOT AIR EXHAUST	8" / 203.2 cm UL103 HT POSITIVE PRESSURE VENT PIPE (850 CFM)
VOLTAGE	220V 60Hz
AMPERAGE	30A RECOMMENDED SERVICE
GAS LINE REQ.	3/4" NPT
BTU	50,000 ROASTER (7" WC NATURAL GAS / 11" WC PROPANE)
APPROX. HOURLY CAPACITY	40 LBS / 18.2 KG GREEN , 34 LBS / 15.5 KG ROASTED
CERTIFICATION	ETL LISTED USA AND CANADA

SF-25 Specs with Afterburner

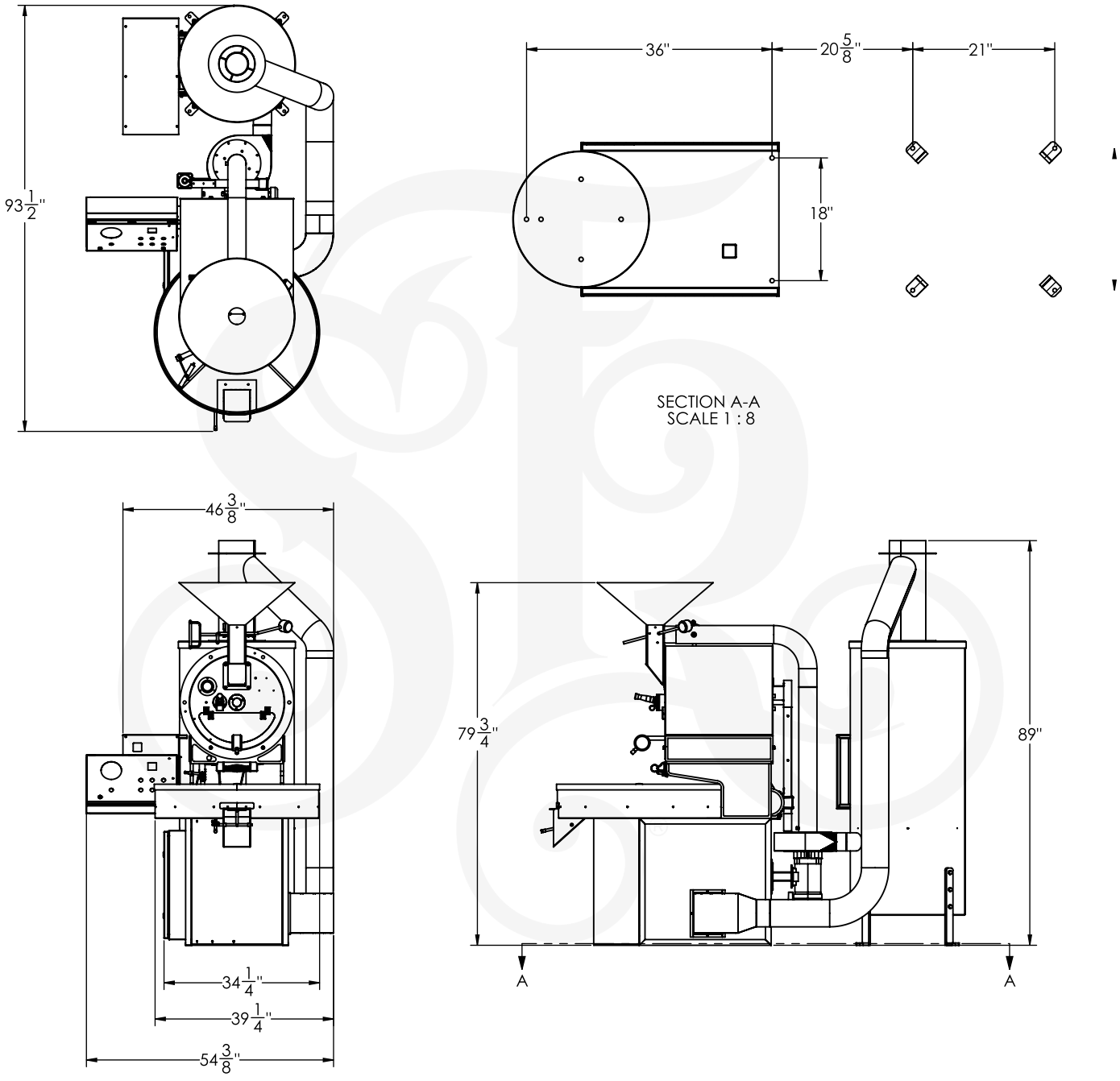

SF-25 Specs without Afterburner

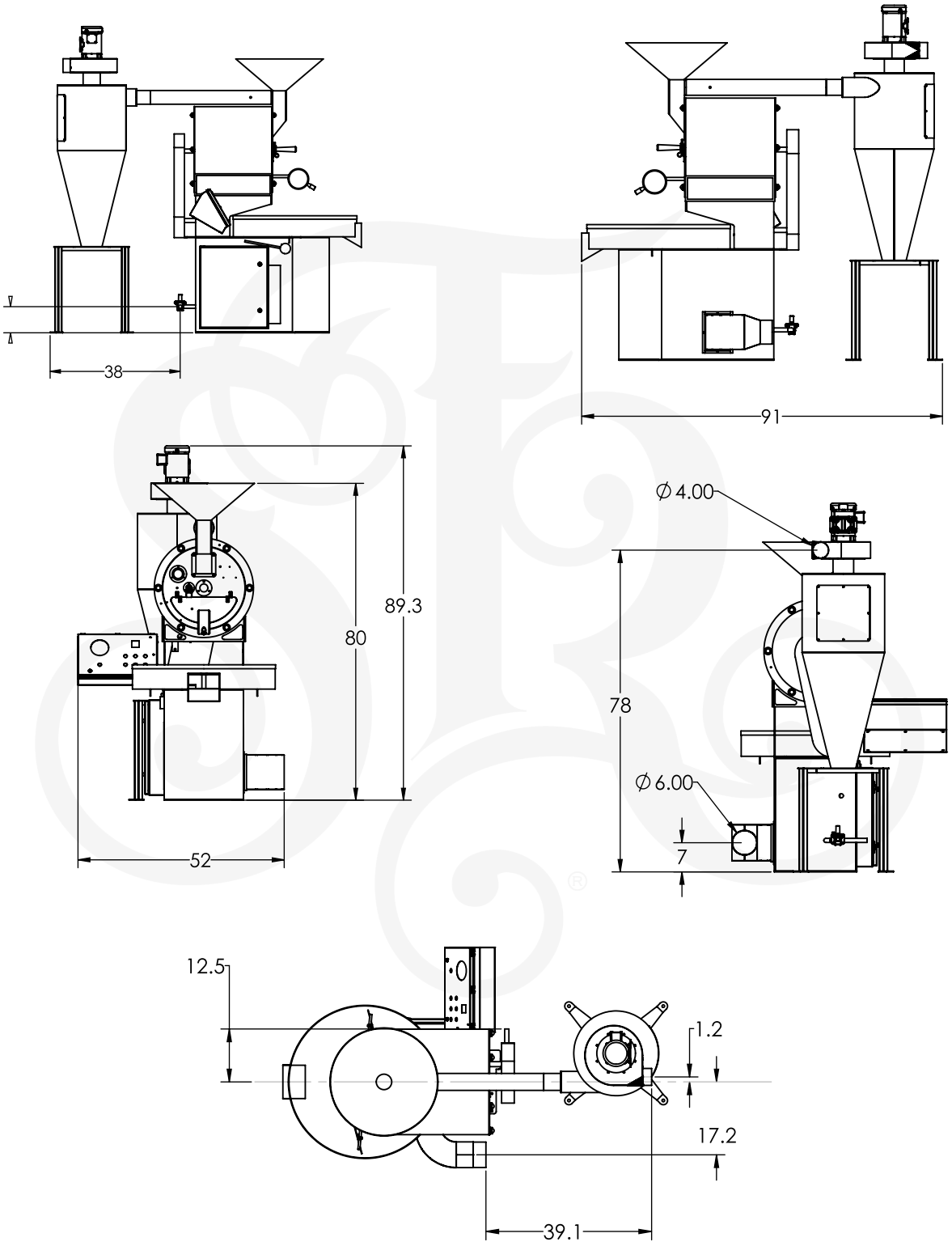

SF-10 Specs

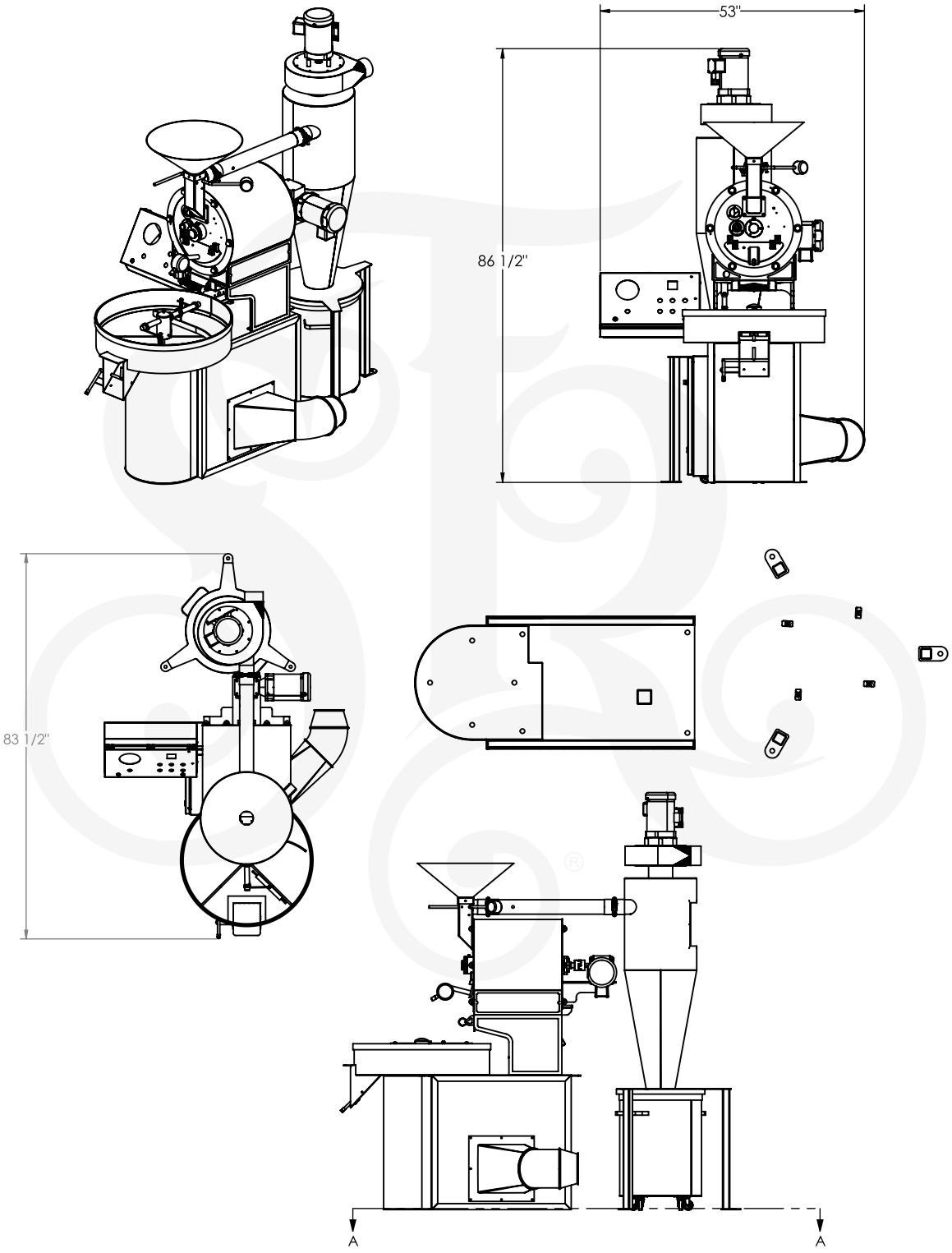

Section 4: *Roaster Operations*

While roasting coffee, avoid wearing loose clothing or jewelry, and keep hair away from machinery. Always ensure the Pre-Operations Checklist (below) is completed prior to roasting. **Most inconsistencies related to roaster performance are due to improper cleaning and maintenance.**

Pre-Operations Checklist

Before starting your roaster, ensure the following cleaning tasks are completed on a daily basis. Failure to do so may result in fire, injury, and/or death. The execution of these tasks are detailed in the maintenance section of the manual.

Before each roast:
- Clean the chip tray.
- Clean the cyclone/afterburner.
- Make sure there is safe clearance.

Additional Notes:
- Ensure that gas and electricity are provided to the roaster.
- Ensure that all maintenance is up to date according to the schedule.

Basic Roasting Terms:
Charge: Beans go from green bean hopper into drum.
Drop: Beans go from drum to cooling tray through bean discharge door.

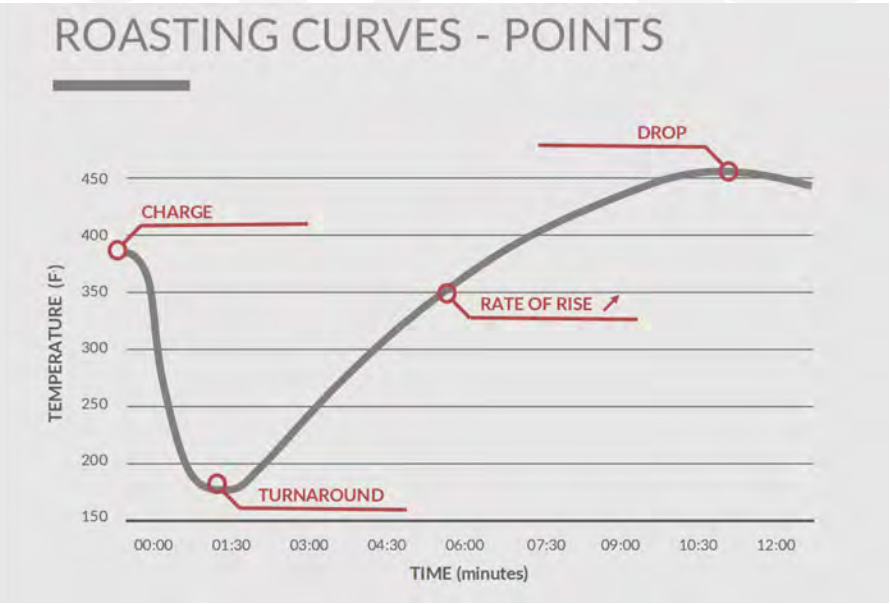

Warming Up the Roaster

Image 3.1

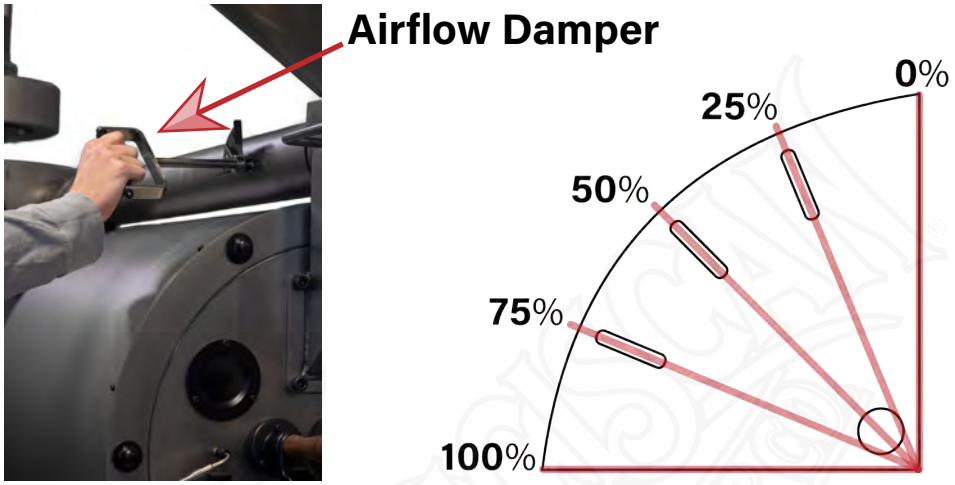

Step 1: Switch roaster on. Drum and exhaust fan will begin rotating.

Step 2: Adjust airflow damper between 50%-100%.

Step 3: Turn Hot Air Fan Potentiometer to 50%.

Note: On roasters with afterburners, the Hot Air Fan Potentiometer controls the blower directly behind the roaster. On roasters with only a cyclone, the Hot Air Fan Potentiometer controls the blower on the top of the cyclone.

Image 3.2

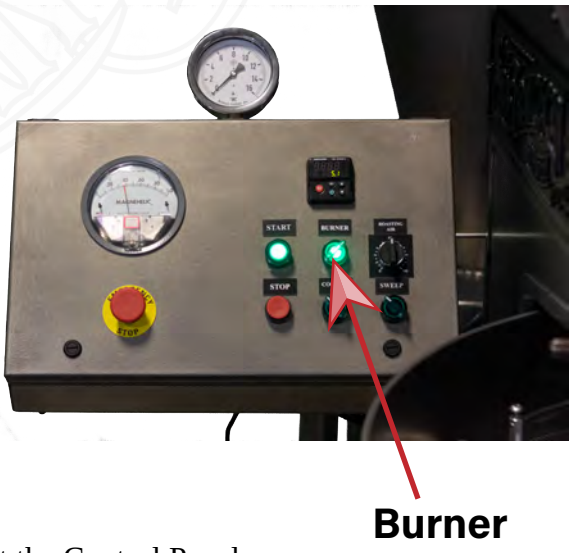

Step 4: Turn on the burner at the Control Panel.

Step 5: The pilot will wait 30 seconds to purge the system. After 30 seconds the pilot igniter will fire intermittently until the pilot ignites*. Look through the sight hole below drum to make sure the pilot is lit. After the pilot ignites, the main gas valve will open. The gas will now flow to the main gas control.

**Note: This may take up to five minutes if the supply line has been properly purged by a gas technician. It may take longer if the supply line has not been purged.*

Image 3.3

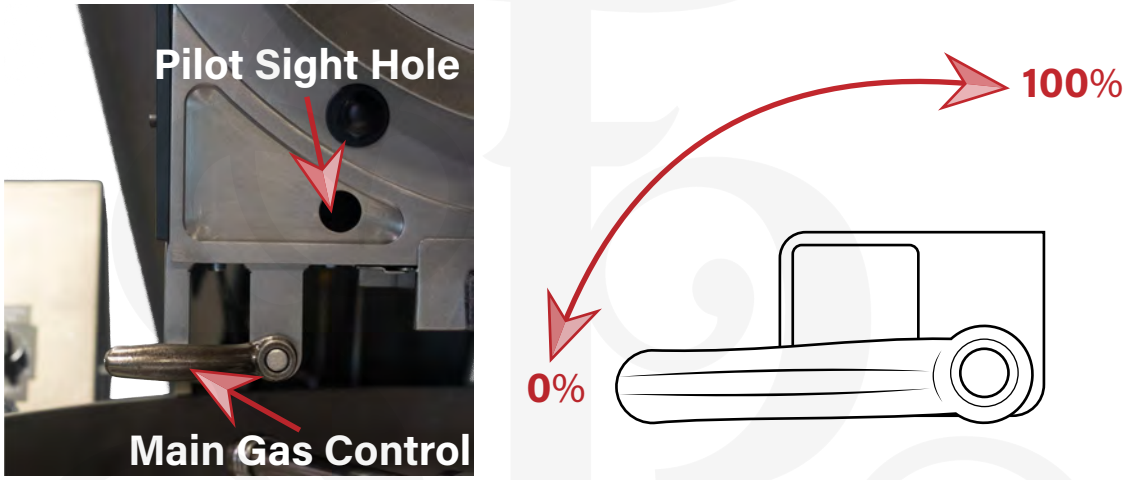

Step 6: Turn main gas control up to approximately 20-30% of maximum (approximately 2" water column (WC) for Natural Gas (NG) or 3'' WC for Liquid Propane (LP)). NG models are regulated at 7'' WC and LP models will are regulated at 11'' WC. Warm up machine for a minimum of 30 minutes, or until your desired charge temperature is reached*. Do not leave roaster unattended while it is turned on.

**Note: Heating the roaster too quickly will cause the drum to expand faster than the roasting drum frame. This can cause rubbing and may cause the drum to cease in extreme cases. If you hear rubbing, turn the main gas control to 0%. The rubbing should stop within one minute. Refer to drum adjustment procedures.*

Roasting

Image 3.4

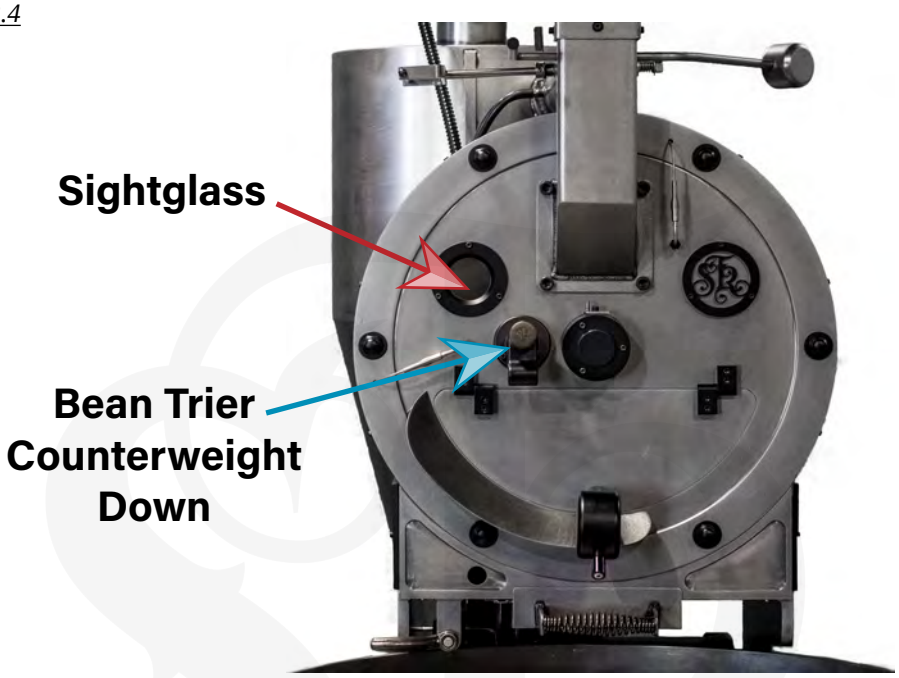

Step 7: Do not allow the bean temperature to exceed 465°F (241°C). Environmental temperature may be manipulated by adjusting the airflow.

**Note: An FM-rated high-safety limit is set at 465°F (241°* C). *This is intended to be used as a safety restraint, not an operational limit.*

Step 8: Monitor roast aromatics with the trier and observe color changes visually through the sightglass. The trier has a counter weight on the handle that shows the orientation of the trier. Always direct trier counter weight down to prevent beans from getting caught in the trier scoop.

Afterburner

**Note: If your roaster is equipped with a Cyclone rather than an Afterburner, then this section of the manual will be irrelevant. Skip to the "Post Roast" section of the manual.*

The afterburner is equipped with a three way control switch and a digital temperature read-out/high temperature limit. The afterburner may be used in either auto or manual mode as described below.

Manual Mode: Manual mode is activated by moving the switch to the upward position. In manual mode the afterburner may be turned on and off each roast as desired by the operator. The afterburner may take about 30 seconds to light as the system purges itself prior to lighting. During a roast session, the afterburner may be left on to maintain a high operating temperature.

Note: In manual mode, the afterburner is intended to be left on during a roast. It should not be turned on and off more than once during a single roast.

Auto Mode: Auto mode is activated by moving the switch to the downward position. In this mode, the function of the afterburner is controlled by two timers and an activation switch. There is a finger on the gas rod that releases a button when the gas is turned on. This activates a five minute timer. When the timer reaches five minutes, the afterburner is triggered to turn on. By a bean temperature of 300°F (150°C), the afterburner should be turned on and increasing in temperature. At the end of a roast, the gas should returned to the off position. Once the finger on the gas rod depresses the button, a one minute timer will begin. When this times out, the afterburner will be turned off. This mode will allow the afterburner to operate when necessary.

Note: Auto mode may prohibit the roaster from reaching its maximum operating temperature.

Afterburner Adjustment: When the roaster leaves the factory, the afterburner is set so that the temperature during normal operation will hover between 1,000-1,300°F (540-700°C) during constant operation. The temperature of the afterburner may be affected by several environmental factors. Airflow and the temperature of the environment will impact the operating temperature of the afterburner.

Post Roast

Step 9: Turn the main gas control to 0%. Activate the cooling air on the Control Panel. Activate the cooling sweep with the sweep switch located on the control panel. Do not place hands in the cooling tray while the sweep is on. Turn on cooling sweep and fan before drop. Close the damper after drop to maintain heat between roasts.

**Note: The cooling fan may take up to ten seconds to reach its optimal speed.*

Image 3.5

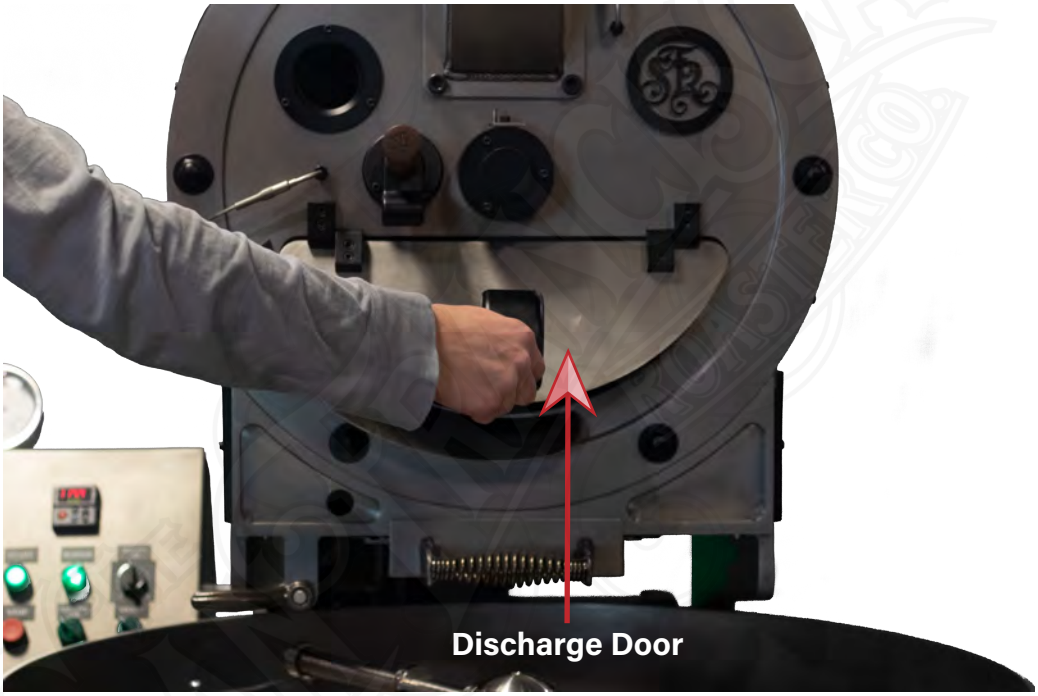

Step 10: Open discharge door. Coffee will drop into cooling tray. Close door as soon as drum is empty.

Step 11: After the beans have cooled, open the drop chute of the cooling tray and the cooling sweep will move the beans to the cooling tray drop chute.

Step 12: When the cooling tray is completely empty of roasted coffee, turn off the sweep and the cooling air switch on the Control Panel.

Shut Down

Step 12: When finished roasting, allow the roaster to cool *while drum and exhaust fan are turning*. Open the damper and turn off gas and burner switch. When bean probe temperature reads less than 150°F/65°C, turn off main power switch.

**Note: Do not open discharge door to cool as this will result in a false temperature reading.*

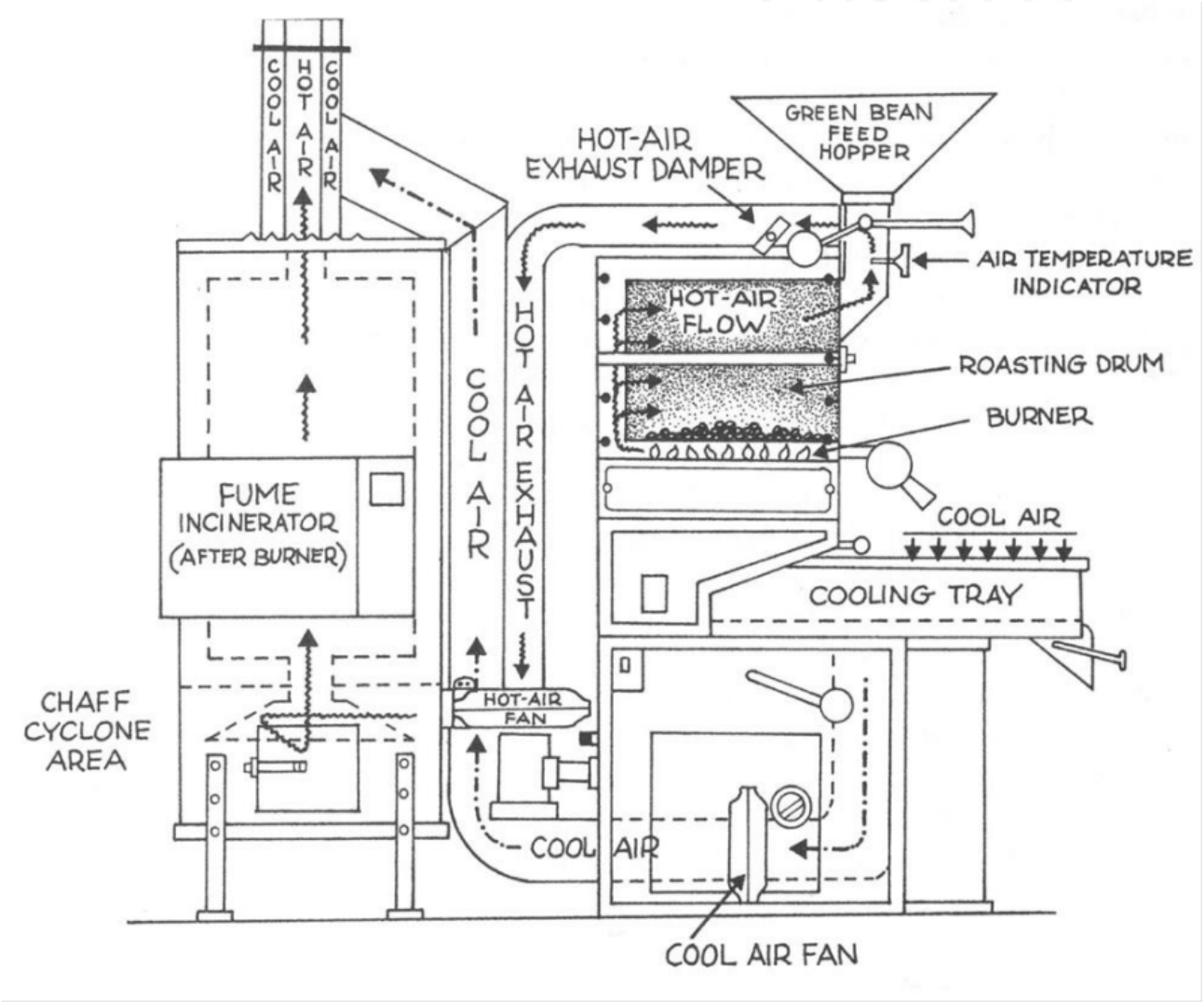

Section 5: *Maintenance*

Image 4.1



1. Roaster
2. Cooling Tray
3. Afterburner/Cyclone
4. Roaster Base

Roaster



Roaster Diagrams

Image 4.2

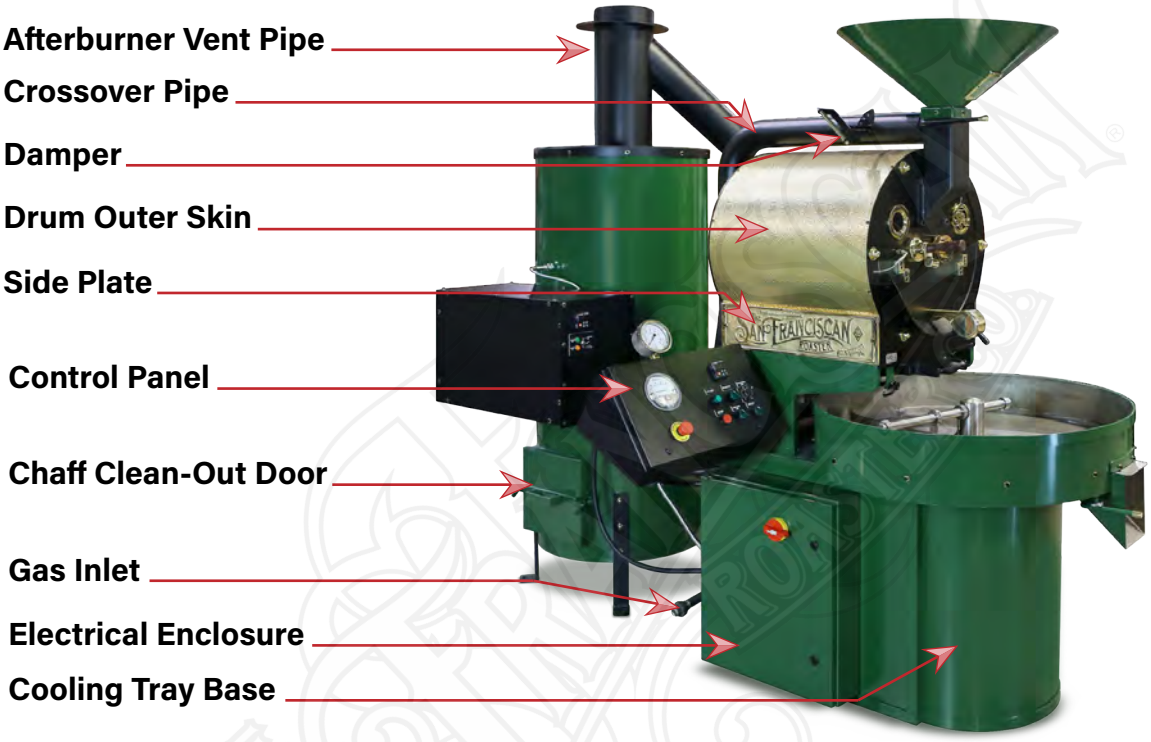

Roaster Diagrams

Image 4.3

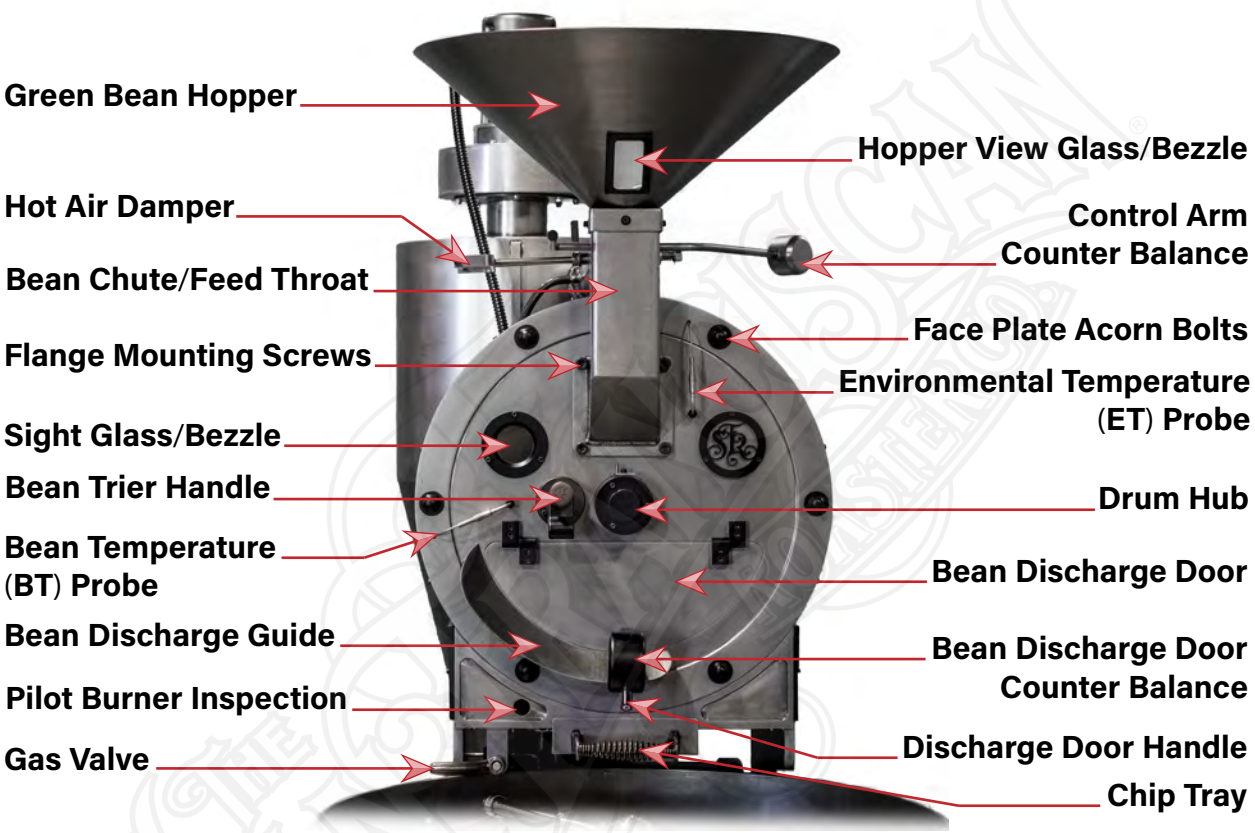

***Warning:** Ensure OSHA lockout and tagout procedures are being practiced prior to cleaning and maintaining the roaster.*

Cleaning the Sightglass

Image 4.4

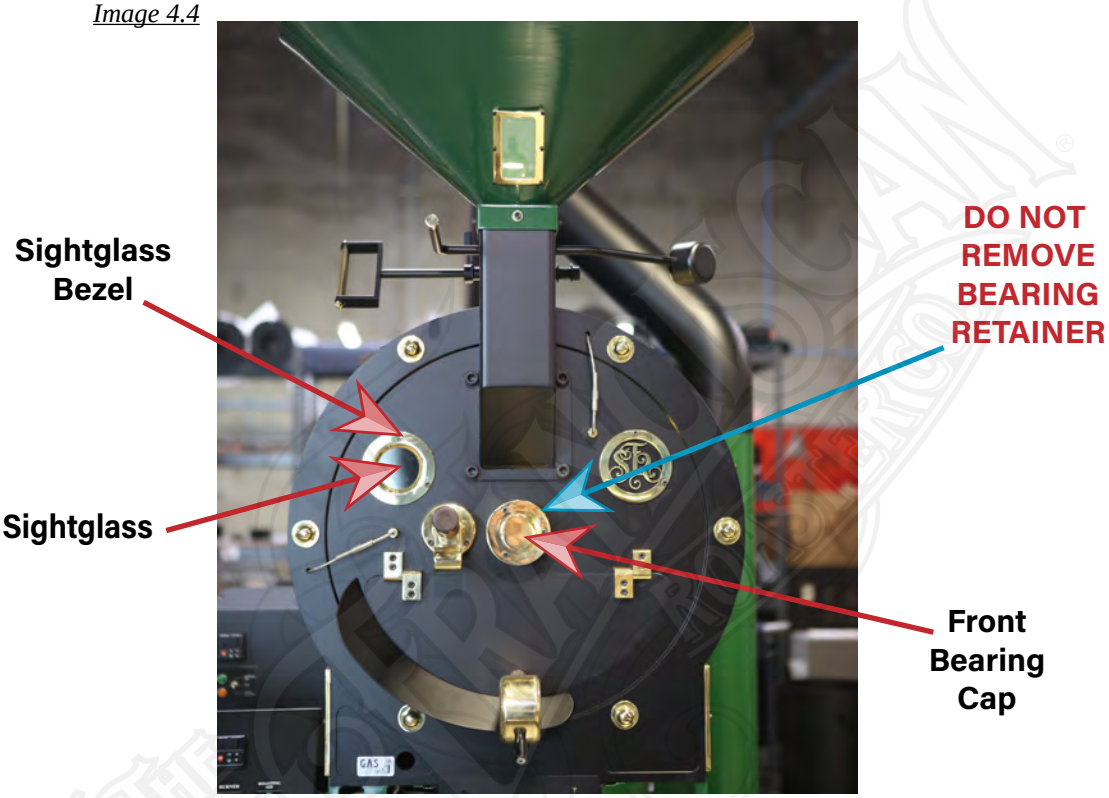

To clean your sight glass, remove the brass/nickel sightglass bezel. Roaster should be off and cool. The glass is free to fall out at this point. You may need to gently tap the glass from the back if residue is causing it to stick. Soak the glass in cleaning solution and then use a flat razor to scrape the glass clean. Clean the sight glass seat, re-seat the glass, and reinstall the sightglass bezel.

Cleaning the Drum Hub

Access the front drum bearing by removing the three cap screws securing the bearing cap. ***Do not remove the bearing retainer which supports the roasting drum shaft.*** Visually inspect the condition of the bearing and wipe out any debris or old grease. Repack the bearing using a high-temperature food grade grease. Refit the cap with the screws previously removed . The bearing needs to turn freely. If it appears rigid, hard-packed with residue, or makes noise during operation, it may need to be serviced or replaced.

Adjusting the Drum Spacing

Image 4.5

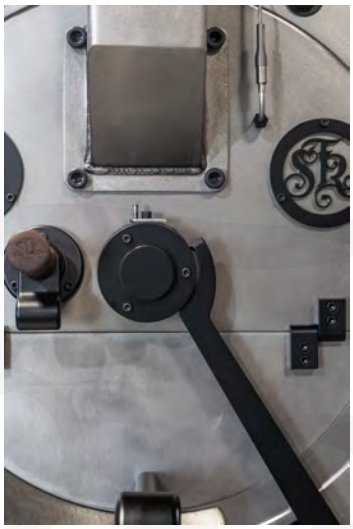

If you are experiencing rubbing or have excessive chaff falling between the faceplate and the drum, you will need to adjust the spacing of the drum. You want to adjust the drum spacing as *close to the front of the roaster as possible* (around 1.75 mm or the thickness of a quarter coin) without it rubbing under normal warm-up proce-dures (20-30% of the maximum gas as described in normal startup procedures).

How to adjust away from faceplate:

1. Ensure that your roaster is cold and turned off. Remove the adjustment stop pin from the top of the drum hub. Then, begin heating the roaster under normal warm-up procedures.

2. When the rubbing becomes audible, turn off the heat from the burners. Use the spanner wrench to turn the hub retainer one notch clockwise. Turn on the burners and listen for the rubbing noise. Repeat this process until you reach your highest charge temperature without any audible rubbing. Once the adjustment is complete, reinstall the adjustment stop pin.

How to adjust closer to the faceplate:

1. Ensure that your roaster is cold and turned off. Remove the adjustment stop pin from the top of the drum hub. Use the spanner wrench to turn he hub retainer one notch counter-clockwise.

2. Start the roaster, and listen to see if there is any audible rubbing under normal warm up procedures. Once the adjustment is complete, reinstall the adjustment stop pin.

**Note: Making these adjustment on a cold morning is the most effective way to accurately adjust your drum spacing.*

Cleaning the Discharge Door

Image 4.6

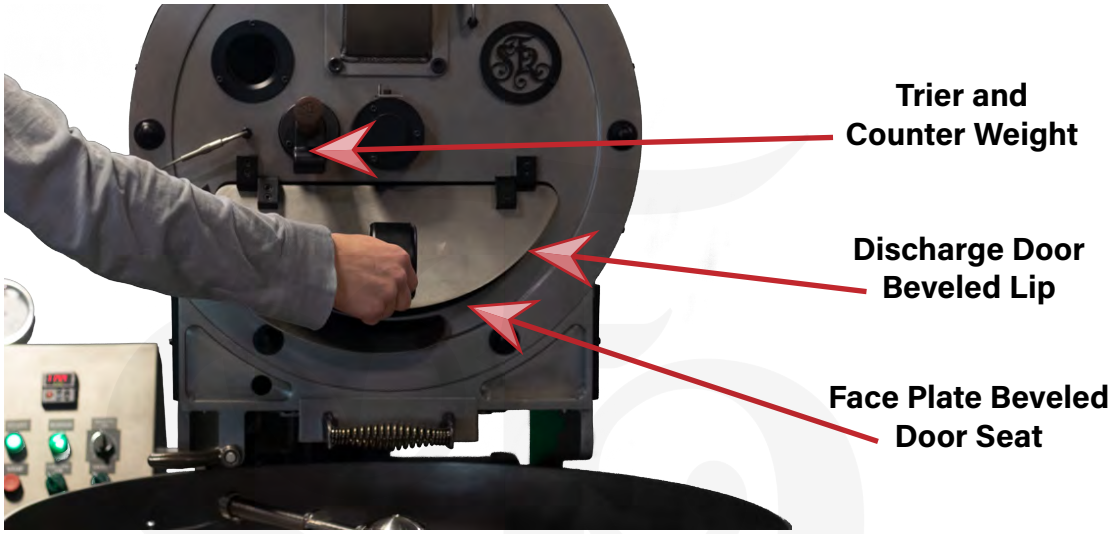

Roaster should be off and cool. Lift the bean discharge door and wipe around the discharge door beveled lip and face plate beveled door seat. Remove any debris or build-up that may prevent the door from fully closing. Ensure that the weighted door handle is secure. Remove the trier and clean off any debris that may keep it from moving freely.

Cleaning the Chip Tray and Burners

Image 4.7

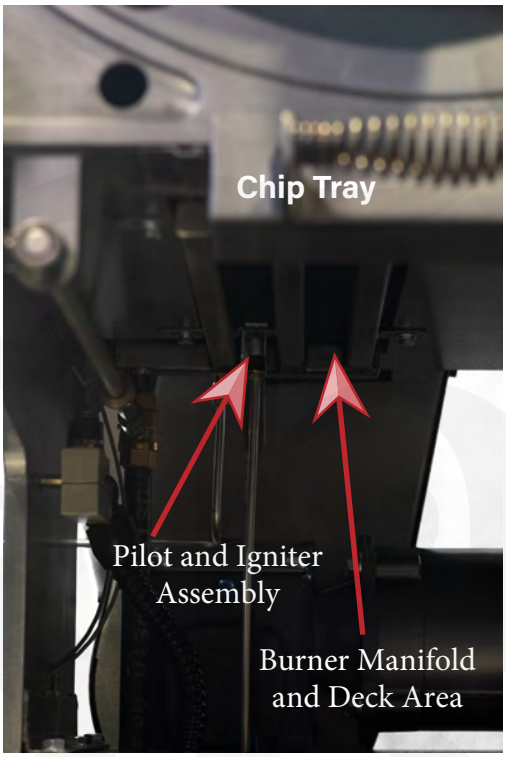

Remove and clean the chip tray. With the tray removed, clean the underside of the roaster around the burners. This can be achieved using compressed air, a soft brush, and shopvac. Do not strike the burners, electrical line, or gas line. Blow compressed air through the face plate opening to dislodge any build-up of chaff or debris in the rear of the roaster.





To access burners to clean and soak with Roaster Soakz remove side panel, siding and insulation*. If your burners are not burning blue, it is a good indication they need to be cleaned. Remove burners with 5/8 wrench. After cleaning add pipe thread sealant and reinstall burners.



*Note: when putting insulation back make sure probe wires are over the insulation so probes do not get burnt.

Cleaning the Chain Drive/Direct Drive

Image 4.8





Chain Drive: Remove the 6 bolts that attach the chain guard. Use a rag to remove debris and old lubricant from the chain. Wipe down the gears with a rag to remove any debris or build up.Visually inspect chain to see if there are any broken or damaged links in the chain. Use chain lubricant and apply to the chain so that each chain joint receives lubrication.

Tip: With the chain guard installed and the roaster running, place a lubrication straw from a pressurized lubrication through the chain guard. Spray the chain until it makes one full rotation.



Direct Drive: Use Mobil FM222 food grade grease to lubricate the bearings. We recommend to grease bearings monthly or when needed.



Roaster Disassembly

Image 4.9

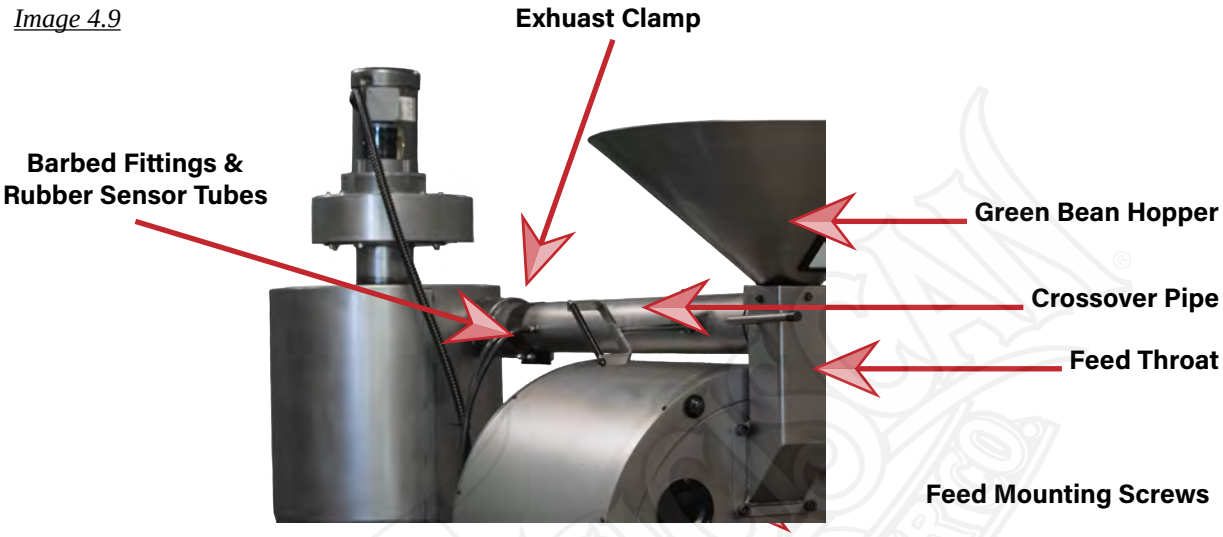

Remove the four feed mounting screws, and pull the feed throat away from the roaster face plate.

Cleaning the Green Bean Hopper

Begin cleaning the inside of the green bean hopper, and work your way down into the feed throat. Flip the assembly over and clean through the square and round pipe. Use brass wire brushes, brush extensions, and compressed air to remove build-up from the inside surfaces. Use a food safe cleaning solution to loosen debris. Operate airflow and hopper controls to gain better access as needed. Rinse and blow dry with compressed air.

Image 4.10



Cleaning the Crossover Pipe

Remove the rubber airflow sensor tubes and the barbed fittings that they are connected to. Use compressed air to remove build-up and debris from inside of the fittings. Ensure there is no debris inside of the airflow sensor tubes.

Remove the crossover pipe (cyclone) or crossover pipe and down pipe (afterburner).

**Note: Afterburner models will require removing 1. the crossover brace locked at the top of the rear plate, and 2. the eight bolts on top of blower.*

Clean the inside of the crossover pipe and/or down pipe with brushes and Roaster Soakz if needed. Repeat until the pipe is free of debris. Make sure there is no build up around the inside of the pipe by the airflow sensor fittings.

**Note: If you will be cleaning the afterburner/cyclone blowers and motors described in a later section, keep the crossover and feed throat removed until the blower cleaning section is completed.*



Cyclone & Afterburner



Cleaning the Cyclone

**Note: The following information is only relevant for the SF-10 and SF-25 cyclone models.*

Image 4.11

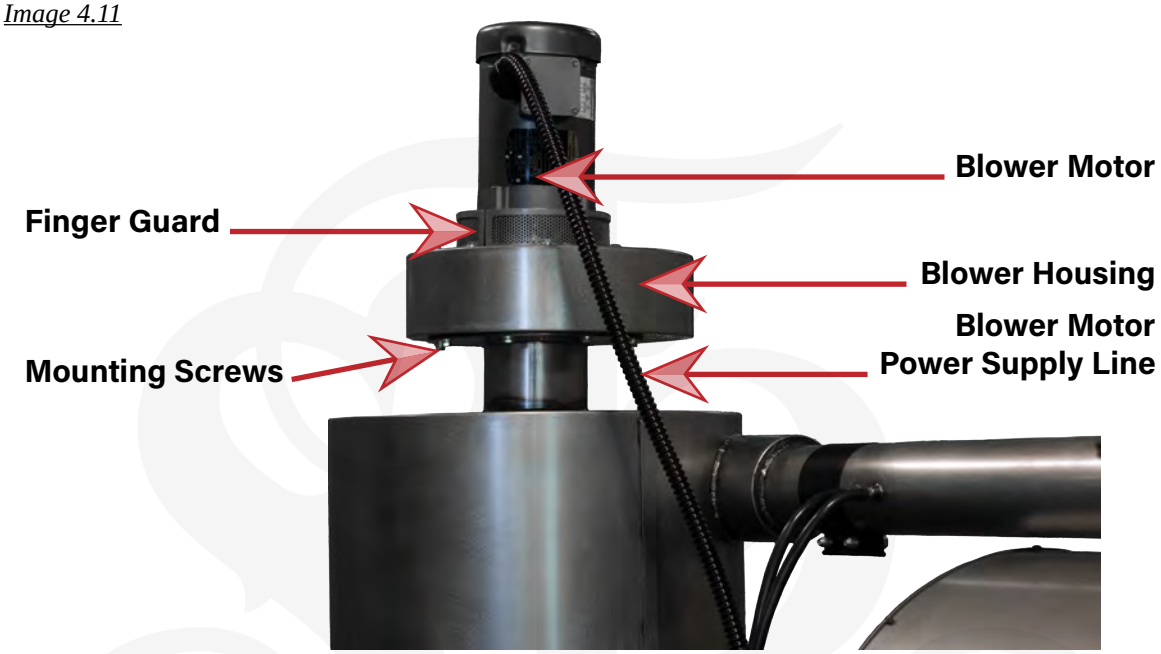

Trace the blower motor electrical power line to the electrical box and disconnect it by turning the quick connector. The electrical line is hard-wired at the motor and is never disconnected. With the blower motor electrical line disconnected, separate the blower assembly from the top of the cyclone by removing the mounting screws and washers.

Clean the fan blades from the intake side of the blower. Use compressed air to blow out debris.

Take the blower assembly apart for better cleaning access. Remove the aluminum tape for disassembly.

Remove the fan from the motor shaft by loosening the set screw on the fan collar. Access the set screw through the blower opening and in-between the fan blades, or with a 90° Allen wrench. If the blower has not been removed or cleaned for a long period of time, it may be stuck on the motor drive shaft. Cafiza may be used to loosen the connection.

The motor may be removed from the blower housing to allow all of the components to be thoroughly cleaned.

Replace all silicone gaskets and reassemble, ensuring that the entire assembly is air tight. Use new aluminum tape to ensure the connection between the blower outlet and exhaust is air tight.

Image 4.12

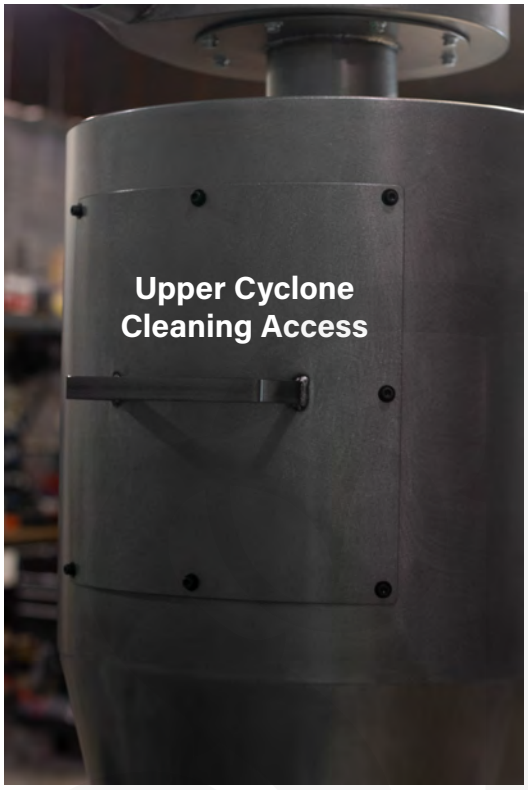



Remove the upper cyclone access door. Start at the top of the cyclone cylinder opening, and work your way down. Brush and wipe off any residue from the inside of the cyclone. Allow loosened debris to fall to the bottom of the chaff bucket.

Undo the latches on the chaff bucket to release. Discard the chaff, and use a Shop Vac to clean out the remaining debris. Wipe down the bottom and sides of the bucket with a damp cloth.

When finished, make sure the access door is closed securely to ensure a good vacuum seal when starting the roaster. Reattach the chaff bucket.

Cleaning the Afterburner

**Note: The following information is only relevant for the SF-25 afterburner models.*

With the crossover removed, you should have access to the inside of the hot air blower.

Trace the blower motor electrical power line to the electrical box and disconnect it by turning the quick connector. The electrical line is hard-wired at the motor and is never disconnected. With the blower motor electrical line disconnected, remove the pipe clamp and tape that connect the blower to the afterburner. Then remove the bolts that mount the motor to the frame of the roaster. At this point, the motor and blower housing should be free from the roaster. Remove this assembly for further dismantling and cleaning.

Clean the fan blades from the intake side of the blower. Use compressed air to blow out debris. Take the blower assembly apart for better cleaning access.

Remove the fan from the motor shaft by loosening the set screw on the set collar. Access the set screw through the blower opening and in-between the fan blades, or with a 90° Allen wrench. If the blower has not been removed or cleaned for a long period of time, it may be stuck on the motor drive shaft. Cafiza may be used to loosen the connection.

The motor may be removed to enable all components to be thoroughly cleaned. Replace all silicone gaskets and reassemble, ensuring that the entire assembly is air tight. Use new aluminum tape to ensure the connection between the blower outlet and the afterburner is air tight.

Remove the chaff collector door and vacuum out all loose debris. Reach inside of the chaff collector with a brush and a scraper when necessary. Remove all debris and buildup from the inside of the collector. You may also use Roaster Soakz to help break up and remove stubborn debris. Clean everything that you can access below the ceramic afterburner chamber.

There is no need to clean the ceramic afterburner chamber because all debris inside of the afterburner should be burned off when the afterburner is operating at an optimal temperature, between 1000-1300°F (540-704°C).

**Note: Thoroughly cleaning the lower part of the afterburner will reduce the risk of having a fire. Coffee oils and stubborn debris can ignite if it reaches a high temperature. Removing this buildup will remove fuel and reduce the chances of having a fire.*

Cooling Tray



Cleaning the Cooling Tray

Lift your cooling tray out of the lower deck and blow off any debris (top and bottom sides) with compressed air. You may need to loosen two screws located below the tray (bottom left/right) first. Set it in a place where you can wash and scrub it clean. Shop Vac and wipe the surfaces with a damp cloth.



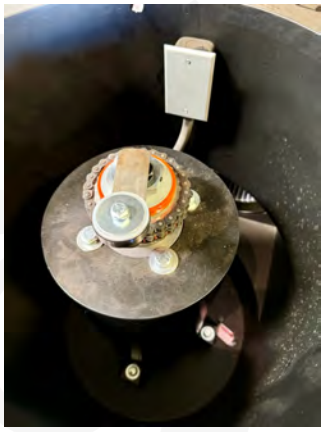

Shop Vac under the cooling tray. Apply a generous amount of cleaning solution to the tray, cooling screen, and sweep components. Let it soak. When the bean oils start to dissolve and loosen, wipe clean. Apply more cleaning solution in stubborn areas and work the surfaces with a scrub brush until clean. Rinse the entire assembly with clean water and dry. Compressed air will expedite the drying.



**Note: Do not let water sit in the tray for long periods of time.*

Reinsert the cooling tray and inspect the overall condition of the sweep components for wear and proper adjustment. Ensure the rotating sweep components operate level to the cooling screen and that the sweep mechanism discharges all of the beans during operation.

Check the Teflon paddle for wear and alignment. If the Teflon paddle is worn down or catching the tray as it rotates, it should be replaced.

Cleaning the Cooling Blower and L-Pipe

With the cooling tray removed, clean the inside of the roaster body beneath the tray, and remove all loose debris.

**Note: Disconnect the cooling air "L pipe" at both ends on afterburner models. Clean the inside of the pipe.*

Image 4.13

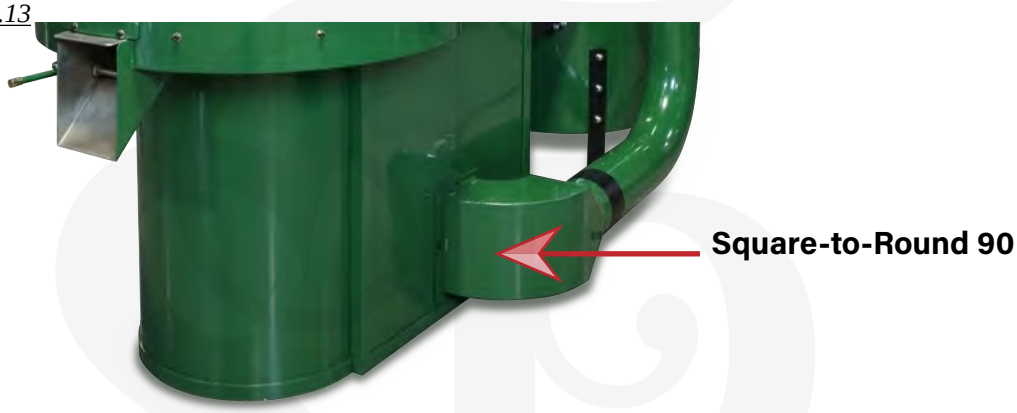

Remove the Square-to-Round 90 to provide access to the side of the cooling fan. Reach into the side of the roaster and clean the fan.





Cleaning the Exhaust System

Clean the exhaust system annually or as needed based on the quantity of coffee roasted. A flue sweep or brush may be used depending on the exhaust installation. Keeping the exhaust system clean will maintain good airflow and reduce the risk of fires.



Reassembly

Reassemble the rest of your roaster in reverse order of cleaning...

1. Mount and secure blower assembly.
2. Reconnect blower electrical line to the electrical enclosure.
3. Install crossover pipe/hopper assembly.
4. Reconnect cooling vent components.
5. Thanks for loving your San Franciscan Roaster!

Recommended cleaning intervals...

- Daily: Empty chip tray after every roast and safely discard contents.
- Daily: Clean cyclone/afterburner, but NEVER vacuum until contents are cool. We recommend to vacuum when you start your roast day.
- Daily: Blow out burner area to make sure no there is no debris build-up.
- Monthly: Grease front and rear drum bearings.
- Monthly: Remove cooling tray, and blow out chaff build-up.
- Quarterly: Remove fan assembly and clean fan. Disassemble if needed.
- Quarterly: Remove and clean crossover pipe/hopper assembly.
- Quarterly: Remove cyclone cap and clean cap and inner cyclone chambers or afterburner..

Cleaning intervals will depend on how often, and how dark you roast, as well as the cleanliness of the green coffee. Keep in mind that any restrictions in the roasting system can prevent your roaster from igniting, can increase roasting times, diminish performance, and negatively impact flavor in the cup.

If you have any questions about maintaining your San Franciscan Roaster or replacement parts, please contact our Support team.

SF-25 Schematics

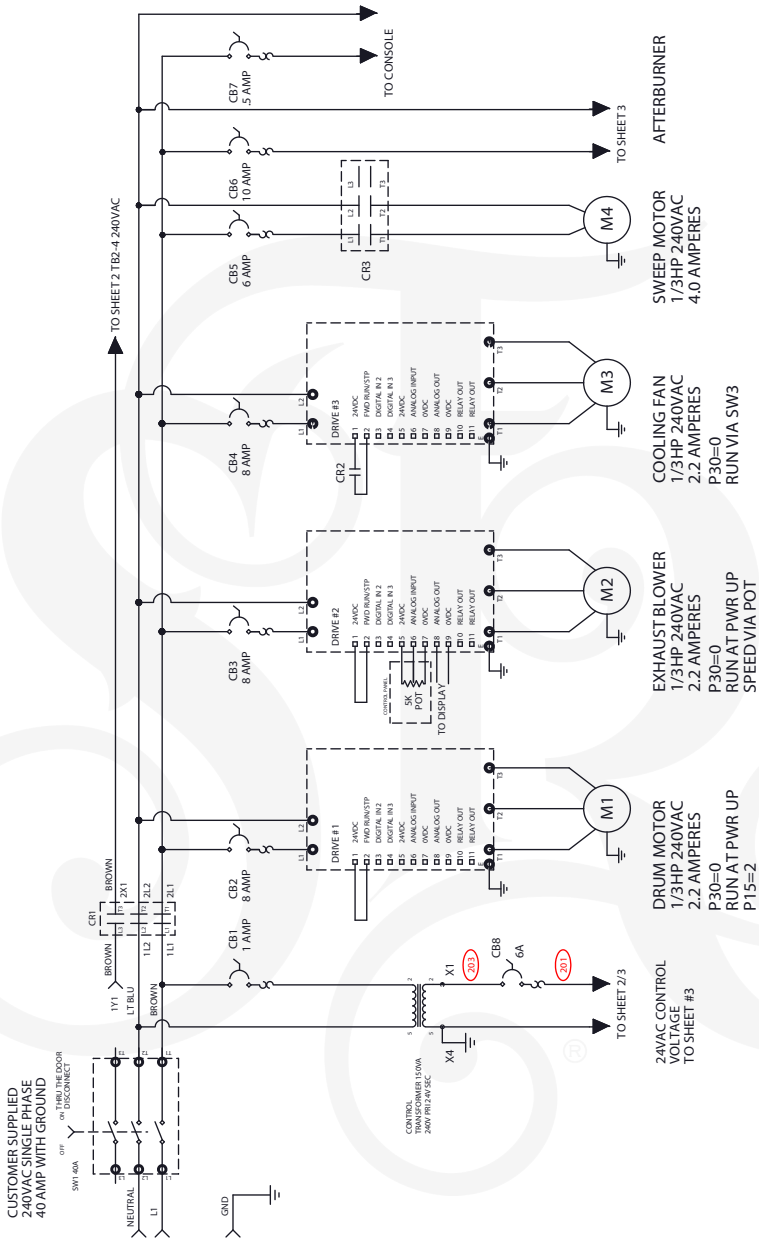

(2) DENOTES WIRE ID NUMBER

TB1-9 ☐ DENOTES TERMINAL BLOCK NUMBER IN MAIN CONTROL PANEL

PROPRIETARY INFORMATION, PROPERTY OF SAN FRAN MFG. DO NOT REPRODUCE WITHOUT THE PRIOR WRITTEN CONSENT OF SAN FRAN MFG.	CAD GENERATED DRAWING: DO NOT MANUALLY UPDATE DO NOT SCALE DRAWING	**San Fran Mfg.** 4048 Technology Way, Suite F Carson City, NV 89706 866-957-9233 Intl: 775-996-2280
UNLESS OTHERWISE SPECIFIED DIMENSIONS ARE IN INCHES TOLERANCES ARE: DECIMALS .X: +/- 0.050 .XX: +/- 0.020 .XXX: +/- 0.010 ANGLES X : +/- 1.0 ° X.X: +/- 0.5 ° X.XX: +/- 0.05 ° ALL Ø's FOR PEM HARDWARE +.001 -.002	SCALE: 1:1 APPROVALS / DATE PART DRAWING CHECKED [ ] __/__/__	PROJECT [ ] DESCRIPTION SF25 Schematic SIZE C DWG. NO. SFR-25-001E REV. CUST: [ ] SHEET 1 OF 1

SF-25 Schematics

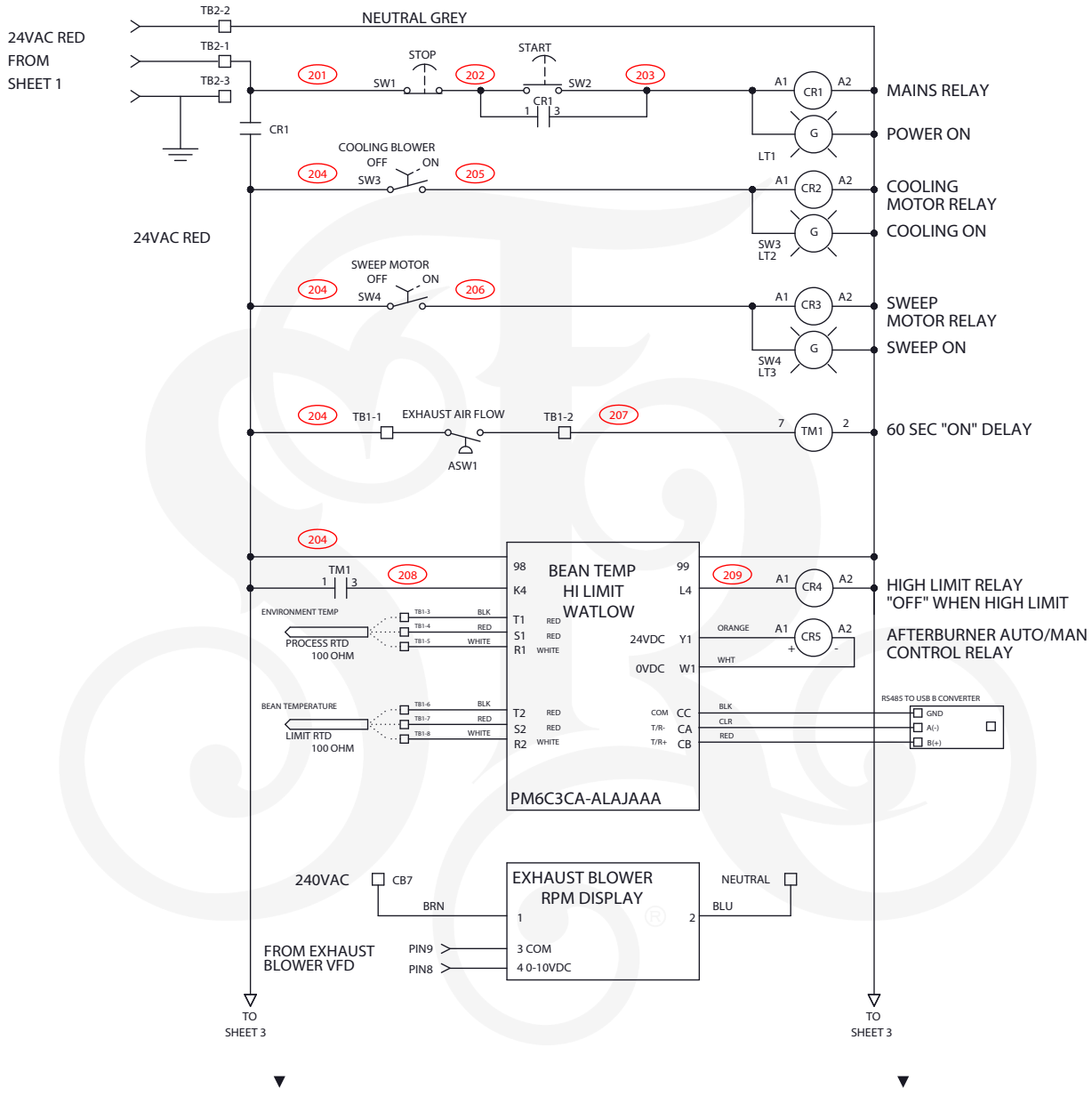

(2) DENOTES WIRE ID NUMBER

TB1-9 ☐ DENOTES TERMINAL BLOCK NUMBER IN MAIN CONTROL PANEL

CAD GENERATED DRAWING: DO NOT MANUALLY UPDATE DO NOT SCALE DRAWING	*San Fran Mfg.* 4048 Technology Way, Suite F Carson City, NV 89706 866-957-9233 Intl: 775-996-2280
SCALE: 1:1	PROJECT [ ]
APPROVALS / DATE	DESCRIPTION: SF25 Schematic
PART	SIZE C / DWG. NO. SFR-25-002E / REV.
DRAWING	
CHECKED [ ] __/__/__	CUST: [ ] / SHEET 1 OF 1

SF-25 Schematics

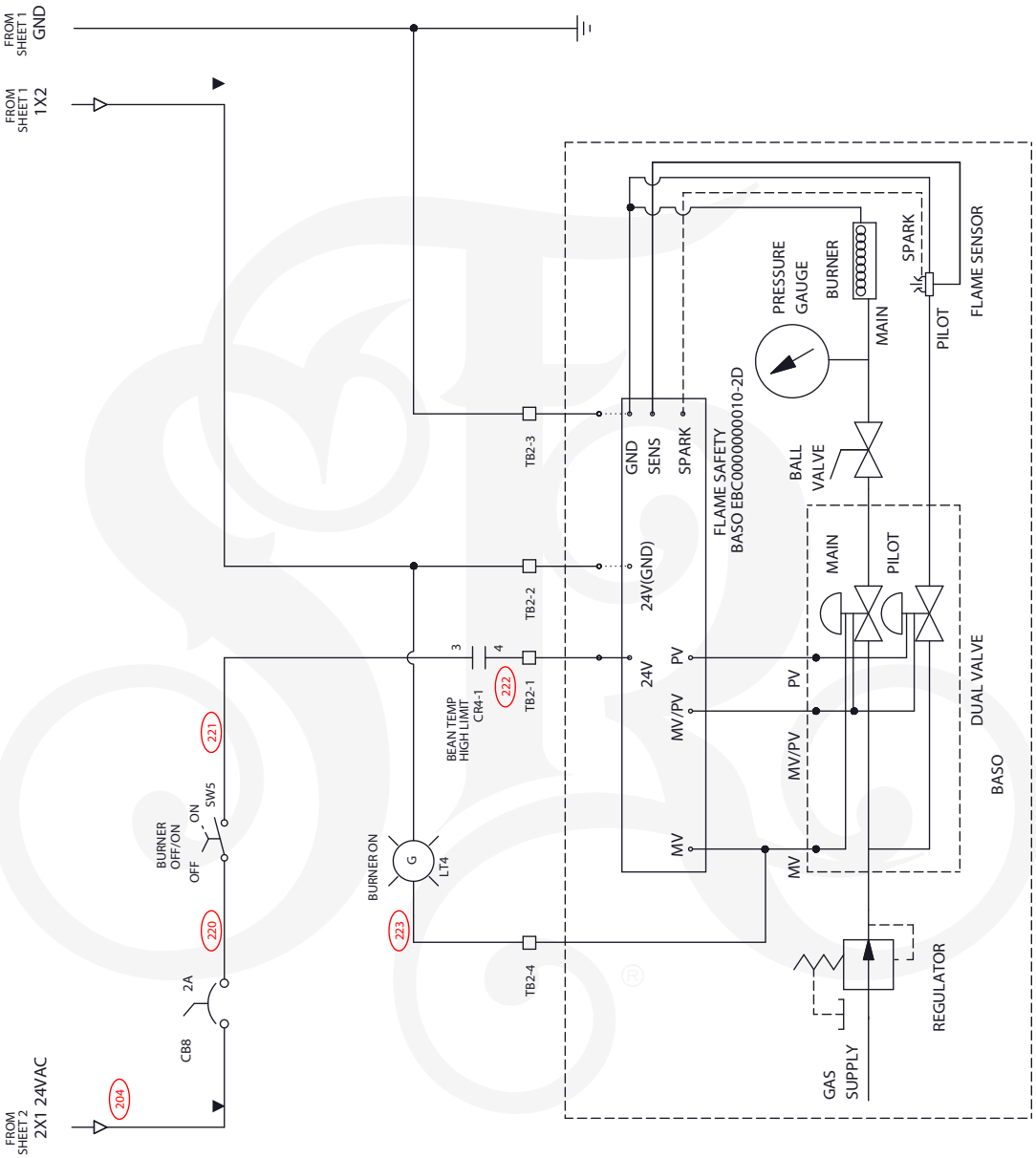

223 DENOTES WIRE ID NUMBER

TB1-9 □ DENOTES TERMINAL BLOCK NUMBER IN BURNER CONTROL BOX

CAD GENERATED DRAWING: DO NOT MANUALLY UPDATE DO NOT SCALE DRAWING	San Fran Mfg. 4048 Technology Way, Suite F Carson City, NV 89706 866-957-9233 Intl: 775-996-2280
SCALE: 1:1	PROJECT [ ]
APPROVALS / DATE	DESCRIPTION SF25 Schematic
PART	
DRAWING	SIZE C DWG. NO. SFR-25-003E REV.
CHECKED [ ] __/__/__	CUST: [ ] SHEET 1 OF 1

SF-25 Schematics

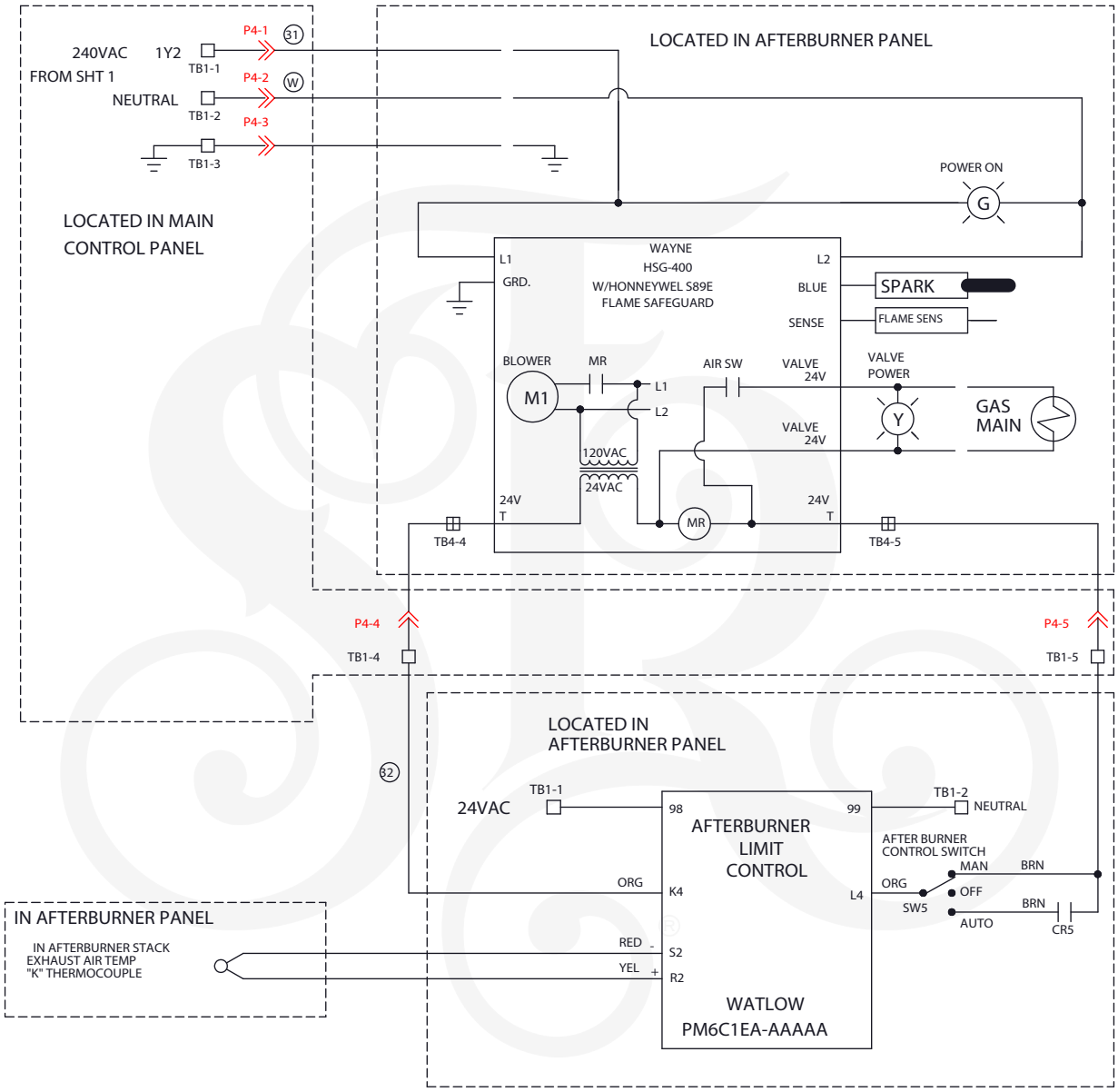

(2) DENOTES WIRE ID NUMBER

TB1-1 □ DENOTES TERMINAL BLOCK NUMBER IN MAIN CONTROL PANEL

TB4-1 ⊞ DENOTES TERMINAL BLOCK NUMBER IN AFTERBURNER PANEL

CAUTION: GAS MAIN VALVE AND YELLOW INDICATOR ARE 24VAC

CAD GENERATED DRAWING: DO NOT MANUALLY UPDATE DO NOT SCALE DRAWING	San Fran Mfg. 4048 Technology Way, Suite F Carson City, NV 89706 866-957-9233 Intl: 775-996-2280
SCALE: 1:1	PROJECT [ ]
APPROVALS / DATE	DESCRIPTION: SF25 Schematic
PART	SIZE C · DWG. NO. SFR-25-004E · REV.
DRAWING	CUST: [ ] · SHEET 2 OF 2
CHECKED [ ] __/__/__	

SF-10 Schematics

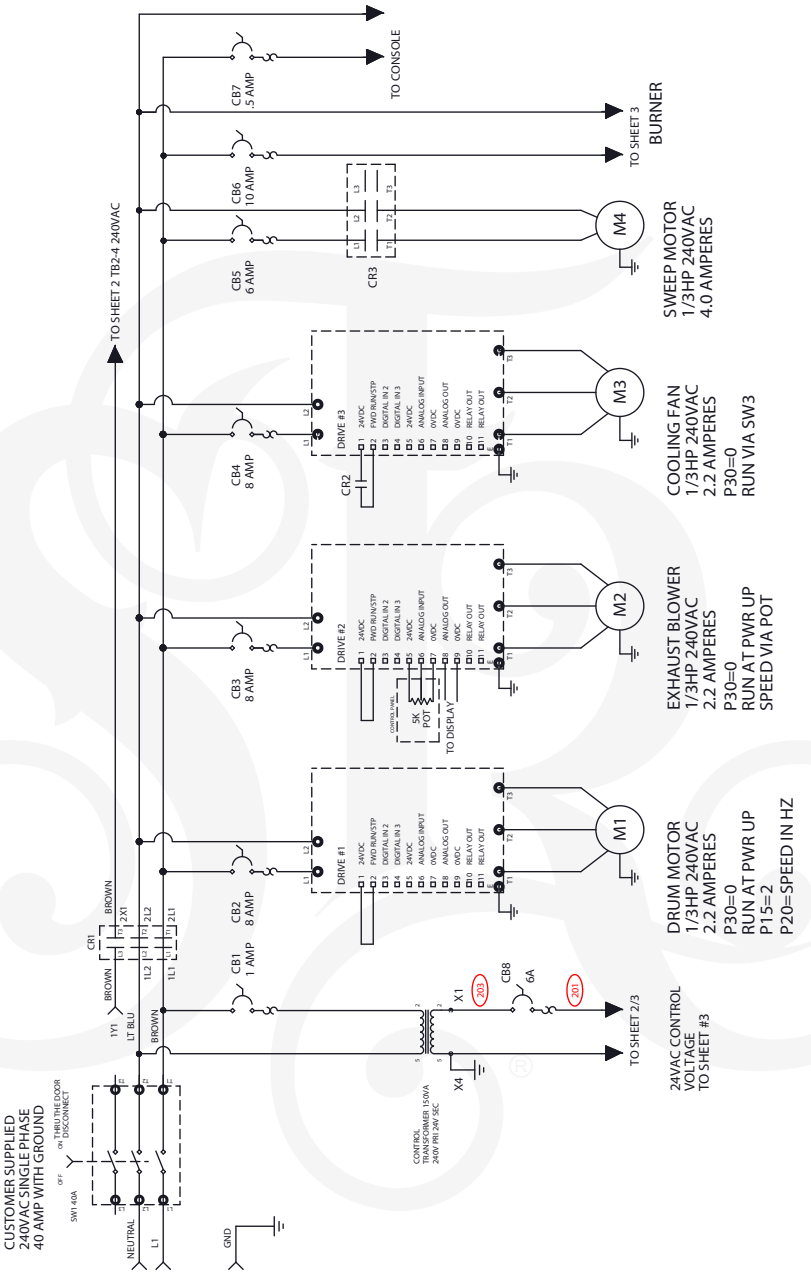

PROPRIETARY INFORMATION, PROPERTY OF SAN FRAN MFG. DO NOT REPRODUCE WITHOUT THE PRIOR WRITTEN CONSENT OF SAN FRAN MFG.	CAD GENERATED DRAWING: DO NOT MANUALLY UPDATE **DO NOT SCALE DRAWING**	*San Fran Mfg.* 4048 Technology Way, Suite F Carson City, NV 89706 866-957-9233 Intl: 775-996-2280
UNLESS OTHERWISE SPECIFIED DIMENSIONS ARE IN INCHES TOLERANCES ARE: DECIMALS: .X: +/- 0.050, .XX: +/- 0.020, .XXX: +/- 0.010 ANGLES: X: +/- 1.0 °, X.X: +/- 0.5 °, X.XX: +/- 0.05 ° **ALL Ø's FOR PEM HARDWARE** +.001 -.002	SCALE: **1:1** APPROVALS / DATE PART DRAWING CHECKED [ ] __/__/__	PROJECT [ ] DESCRIPTION **SF10 Schematic** SIZE **C** DWG. NO. **SF10-S001E** REV. CUST: [ ] **SHEET 1 OF 1**

(2) DENOTES WIRE ID NUMBER

TB1-9 □ DENOTES TERMINAL BLOCK NUMBER IN MAIN CONTROL PANEL

SF-10 Schematics

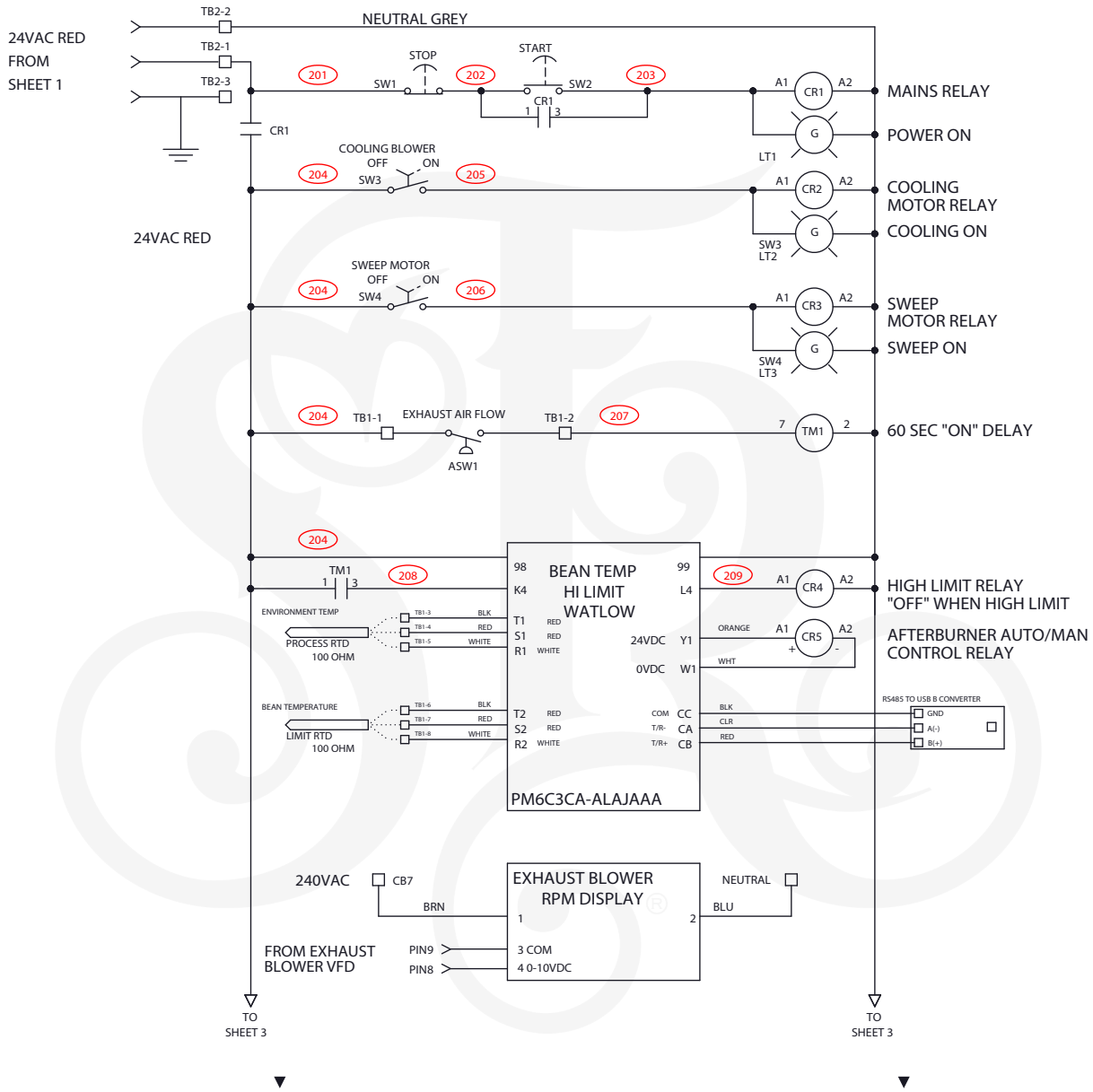

(2) DENOTES WIRE ID NUMBER

TB1-9 ☐ DENOTES TERMINAL BLOCK NUMBER IN MAIN CONTROL PANEL

CAD GENERATED DRAWING: DO NOT MANUALLY UPDATE	*San Fran Mfg.*
DO NOT SCALE DRAWING	4048 Technology Way, Suite F Carson City, NV 89706 866-957-9233 Intl: 775-996-2280
SCALE: 1:1	PROJECT [ ]
APPROVALS / DATE	DESCRIPTION SF10 Schematic
PART	
DRAWING	SIZE C DWG. NO. SF10-S002E REV.
CHECKED [ ] __/__/__	CUST: [ ] SHEET 1 OF 1

SF-10 Schematics

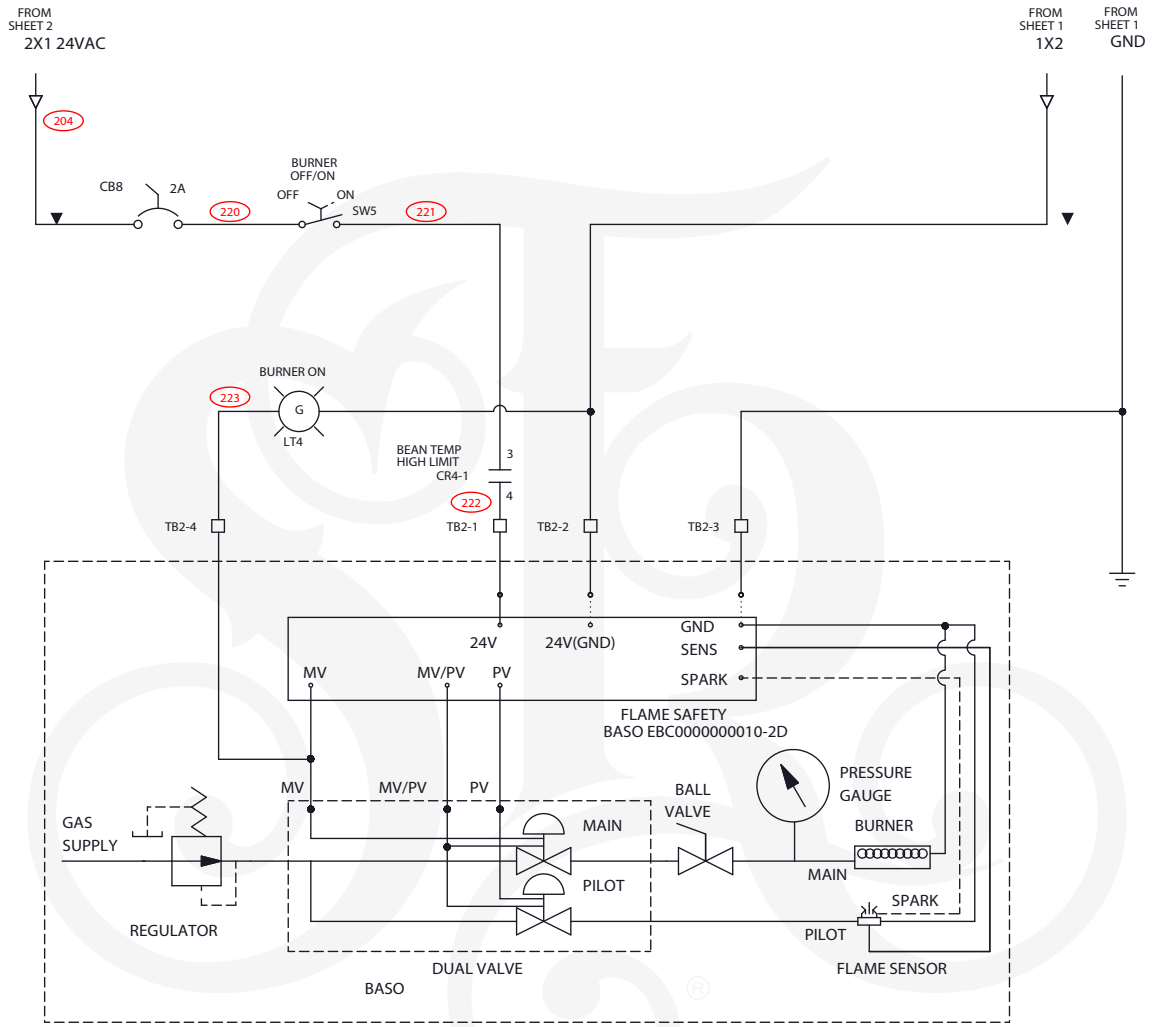

223 DENOTES WIRE ID NUMBER

TB1-9 ☐ DENOTES TERMINAL BLOCK NUMBER IN BURNER CONTROL BOX

CAD GENERATED DRAWING: DO NOT MANUALLY UPDATE	San Fran Mfg.
DO NOT SCALE DRAWING	4048 Technology Way, Suite F Carson City, NV 89706 866-957-9233 Intl: 775-996-2280
SCALE: 1:1	PROJECT [ ]
APPROVALS / DATE	DESCRIPTION SF10 Schematic
PART	SIZE C / DWG. NO. SF10-S003E / REV.
DRAWING	CUST: [ ] / SHEET 1 OF 1
CHECKED [ ] __/__/__	



The San Franciscan Roaster Co.
4048 Technology Way, Ste. F
Carson City, NV 89706

www.sanfranroaster.com